E 315997

RoHS Compliant

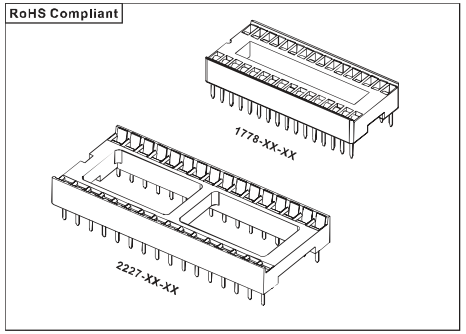

Specifications

1. Current Rating: 1.0A AC/DC.
2. Voltage Rating: 250V AC/DC.
3. Contact Resistance: 15m ohm. max.
4. Insulation Resistance: 1500M ohm. Min.
5. Withstanding Voltage: 1000V AC for one minute.
6. Operating Temperature Range: -40°C to +105°C.

Material and Finish

1. Insulator: PBT (UL94V-0).
2. Contact: Copper Alloy.
3. Plating: Tin Plated.

Feature

1. Design for Home Appliances, Aviation Electronics, Automobile Electronics and Computer(PC) Peripherals.

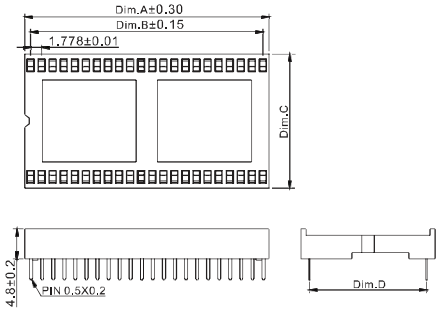

P/N: 1778-XX-XX

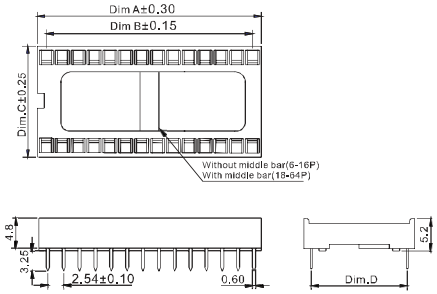

P/N: 2227-XX-XX

Engineering Dimension

P/N:1778-XX-XX Dimension

Circuits	Dim. A	Dim. B	Dim. C	Dim. D	Space
16	14.22	12.45	10.10	7.62	03
20	17.78	16.00	10.10	7.62	
22	19.56	17.78	10.10	7.62	
24	21.34	19.56	10.10	7.62	
24	21.34	19.56	12.65	10.16	04
28	24.89	23.11	12.65	10.16	
30	26.67	24.89	12.65	10.16	
32	28.45	26.67	12.65	10.16	
40	35.56	33.78	17.70	15.24	06
42	37.34	35.56	17.70	15.24	
48	42.67	40.89	17.70	15.24	
52	46.23	44.45	17.70	15.24	
54	48.01	46.23	17.70	15.24	
56	49.78	48.01	17.70	15.24	
64	56.90	55.12	17.70	15.24	
64	56.90	55.12	21.55	19.05	075

P/N:2227-XX-XX Dimension

Circuits	Dim. A	Dim. B	Dim. C	Dim. D	Space
6	7.62	5.08	10.16	7.62	03
8	10.16	7.62	10.16	7.62	
14	17.78	15.24	10.16	7.62	
16	20.32	17.78	10.16	7.62	
18	22.86	20.32	10.16	7.62	
20	25.40	22.86	10.16	7.62	
22	27.94	25.40	10.16	7.62	
24	30.48	27.94	10.16	7.62	
28	35.56	33.02	10.16	7.62	
22	27.94	25.40	12.70	10.16	04
24	30.48	27.94	17.78	15.24	06
28	35.56	33.02	17.78	15.24	
32	40.64	38.10	17.78	15.24	
40	50.80	48.26	17.78	15.24	
42	53.34	50.80	17.78	15.24	
48	60.96	58.42	17.78	15.24	
64	81.28	78.74	26.00	22.86	09

Ordering Information

1778-XX-XX
❶ ❷

❶ No. Of Contacts	❷ Row to Row Space 03: 7.62mm, 04: 10.16mm 06: 15.24mm, 075: 19.05mm

2227-XX-XX
❶ ❷

❶ No. Of Contacts	❷ Row to Row Space 03: 7.62mm, 04: 10.16mm 06: 15.24mm, 09: 22.86mm

Recommended PCB Layout

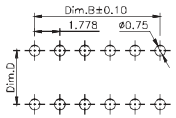

P/N:1778-XX-XX

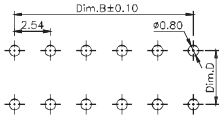

P/N:2227-XX-XX

Unit:mm

PCB Connector