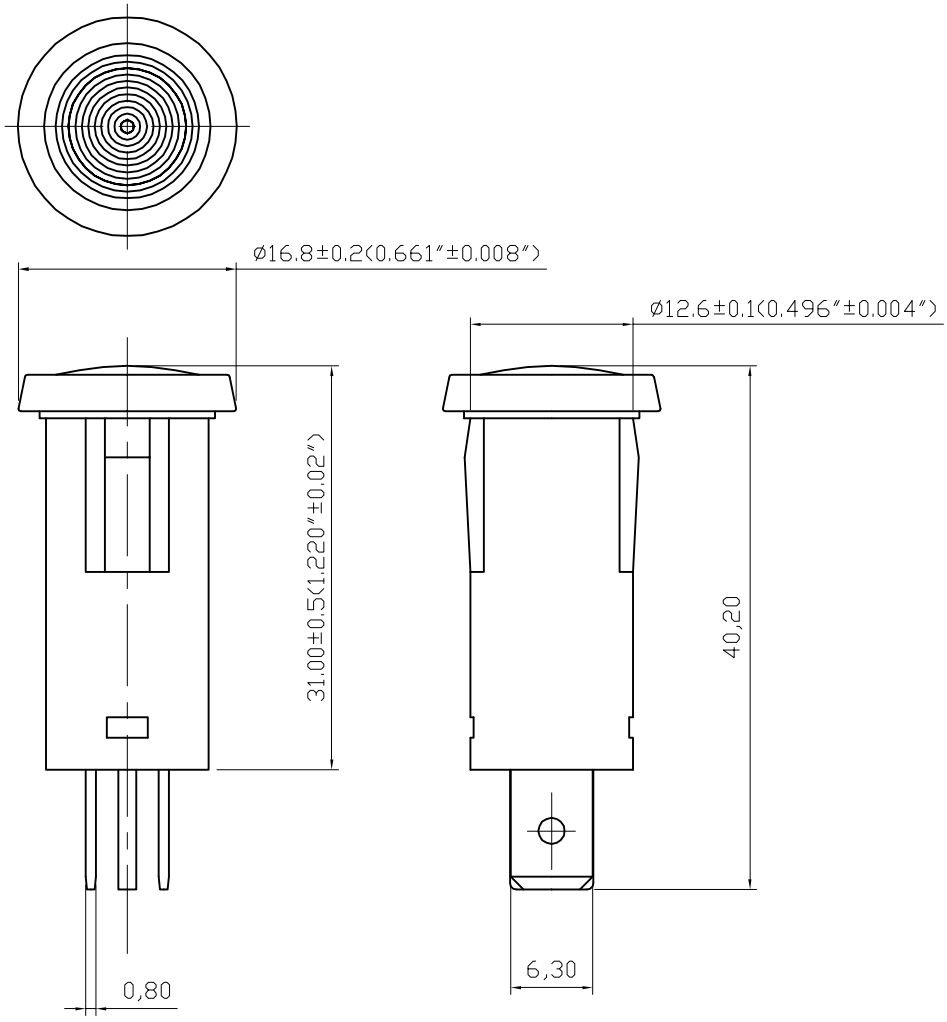

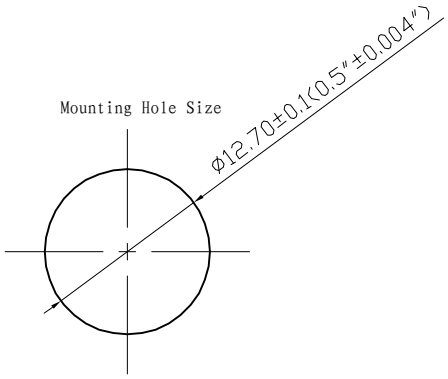

Specification

1.Voltage:12V/220VAC

2.Color: Red,Yellow
Green,Blue,Clear

Des.	徐继君		D03
Chk.			INDICATOR LIGHT
Date		Unit	mm
NINGBO HAISHU KEDE ELECRONICS FACTORY			

A4