AP-26-21

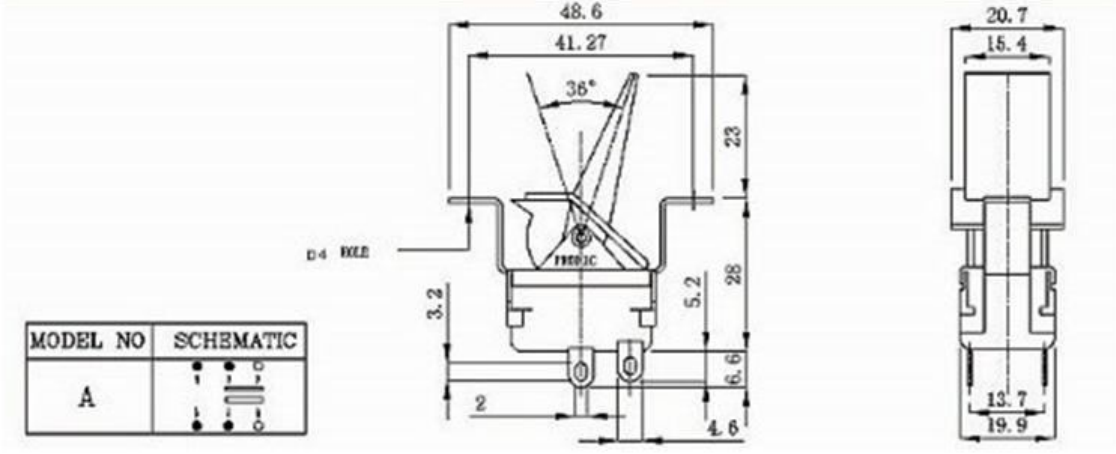
48.6
41.27
36°
23
28
5.2
6.6
4.6
3.2
2
D4 HOLE
20.7
15.4
13.7
19.9
MODEL NO
SCHEMATIC
A