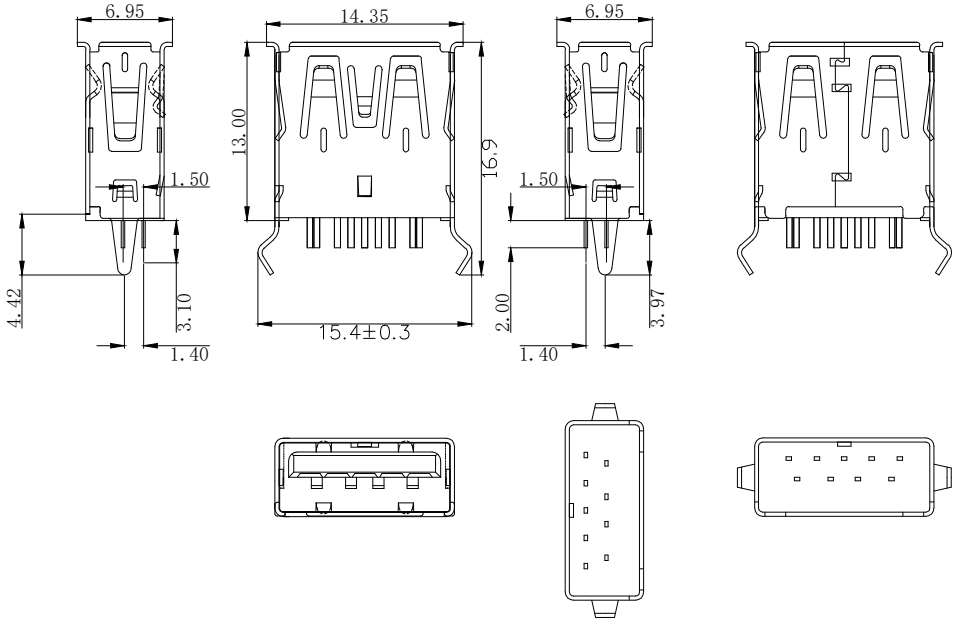

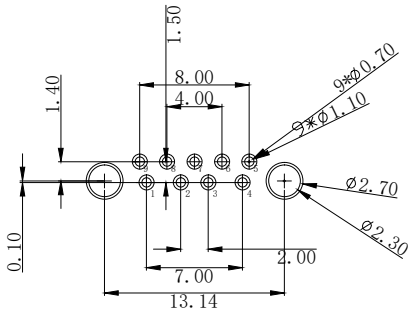

P.C.B LAYOUT
TOL:±0.05

规格说明:Specifications:
电气特性:Electrical:
1.额定电流：Current Rating
1.5A/contact terminal
2.额定电压：Voltage Rating
30V DC
3.接触阻抗:Contact Resistance
30 milliohms MAX
4.耐电压:Dielectnic Withstanding Voitage:
500 V AC AT Sea Levol
5.绝缘阻抗:Lnsulation Resistance:
1000MEGA ohms MIN

1.插拔力：Cnnector Mate and Unmate Force
Mate force:3.57kgf(MAX)
Unmate force:1.02kgf(MIN)
2.端子保持力：Terminal Retenion
1.0kgf(MIN)

1.塑胶:Housing:
Hing Temperature Tnermaplastics,

2.端子:Contact:Copper Alloy C2680
3.外壳:Shell: Copper Alloy C2680/SPCC
电镀:Finish:
1.端子:Contact: Piated Gold in Mating Area;
Tin On Solder Talls
端子四周镀30-50U"(MIN)锡,"镀金1U"
2.外壳:Shell:
铁壳四周镀80U"(MIN)镍，铜壳四周镀60-80U"(MIN)镍
Nickel Plating

PIN ASSIGNMENT

1	2	3	4	5	6	7	8	9	SHELL
VBUS	D-	D+	GND	STDA_SSRX-	STDA_SSRX+	GND_DRAIN	STDA_SSTX-	STDA_SSTX+	GND

(MM)

公差尺寸表 Tolerance	
X. ±0.50	X.° ±2°
.X ±0.30	.X° ±1°
.XX ±0.10	.XX° ±0.5°
.XXX ±0.05	

鹭粤科技（深圳）有限公司
Luyue Technology (Shenzhen) Co., LTD

产品名称 Product Name	USB AF 33.0 9PIN母座 180度两脚立式直插DIP 弯脚 卷边 H=13.0mm
产品料号 Part NO.	LY0023-C09-XX
图号 Drawing NO.	N/A

制 图/Drawing By	Kevin
审 核/Auditing By	Danni
批 准/Confirm By	Leo
SCALE 1:1	SHEET NO. 1 OF 1

Frame Size: A4