PCB LAYOUT

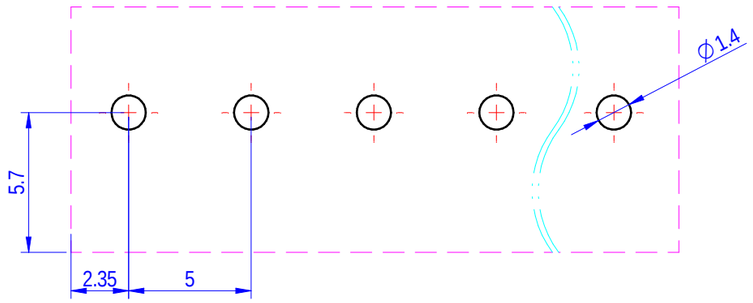

未注公差/General tolerances(mm)														
0 ~ 3	>3 ~ 6	>6 ~ 10	>10 ~ 18	>18 ~ 30	>30 ~ 50	>50 ~ 80	>80 ~ 120	>120 ~ 180	>180 ~ 250	>250 ~ 315	>315 ~ 400	>400 ~ 500	>500	0.1/10
±0.12	±0.18	±0.22	±0.26	±0.31	±0.37	±0.57	±0.80	±0.93	±1.05	±1.15	±1.60	±2.20	±2.50	±2°

UL 标准/UL Standard:	B	C	D
额定电压/电流/Rated Voltage(V)/Current(A)	300/10	/	300/10
IEC 标准/IEC Standard:			
过压类别/Overvoltage Category/污染等级/Pollution Degree	III/3	III/2	II/2
额定电压/电流/Rated Voltage(V)/Current(A)	250/9	320/9	630/9
额定脉冲电压(KV)/Rate Impulse Voltage(KV)	4	4	4
线径范围(硬线和软线)/Wire Range(rigid and flexible)(AWG/mm²)	26~16 / 0.2~1.5		
间距/Pitch(mm)/线数范围/Poles	5.0/N=02~24P		
剥线长度/Stripping length(mm)	8		
使用温度范围/Operating temperature(°C)	-40~+105		
符合RoHS环保要求/Conform to RoHS	Yes		

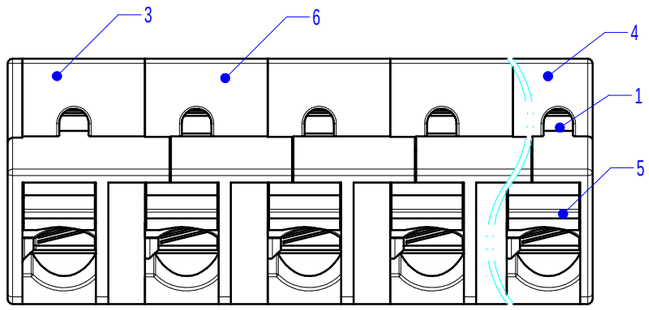

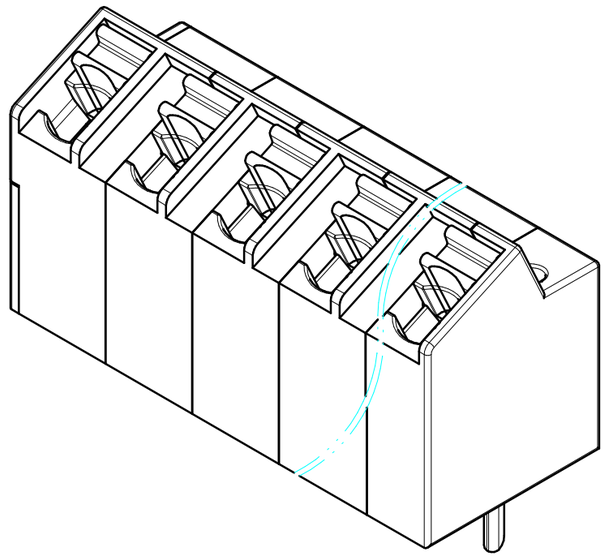

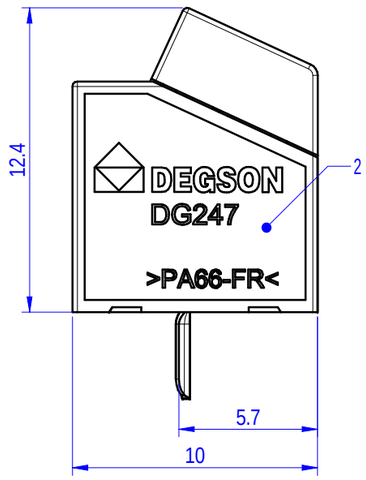

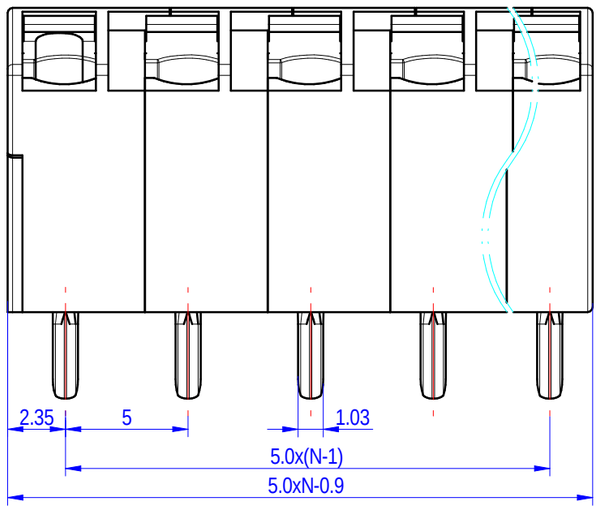

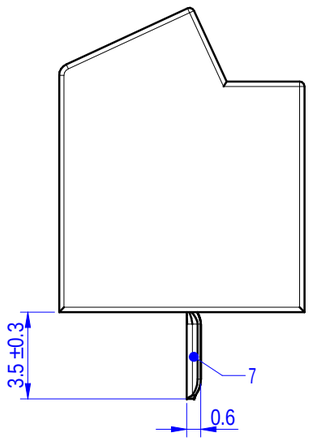

ITEM	NAME OF PART	MATERIAL	NOTES
7	Pin_header	Copper alloy	Sn Plated
6	Mid housing	PA66	UL94V-0
5	Button	PA66-GF	UL94V-0
4	Side Housing2	PA66	UL94V-0
3	Side Housing1	PA66	UL94V-0
2	Cover	PA66	UL94V-0
1	Spring	Stainless steel	/

REV	ECN	DESCRIPTION	DRFT	DATE
00			龚徐涛	2024.09.23

DEGSON

APPD:	兰春华	2024.09.23
CHKD:	陈绍	2024.09.23
DRFT:	龚徐涛	2024.09.23

A3 mm (inch)

MATERIAL:
SURFACE/COLOR: pantone 556C
MAT NO./REV: /
MAT STATUS: 小批量

NAME: DG247-5.0-XXP-1Y-00Z(H)

DRAWING NO.	TYPE	DRAWING STATUS	SCALE	SHEET
200059209	CUSTOMER DRAWING	已发布	2:1	1/1

Transfer or duplication of this document as well as the utilization or communication of its contents are prohibited unless explicit authorization is granted. Violations will be liable for compensation. All rights reserved for patent, utility model or designs registration. 除非经书面授权，否则禁止转让、复制、利用、交流本文件的内容。侵犯者应赔偿损失。本公司保留对涉及发明、实用新型和外观设计专利的所有权利。